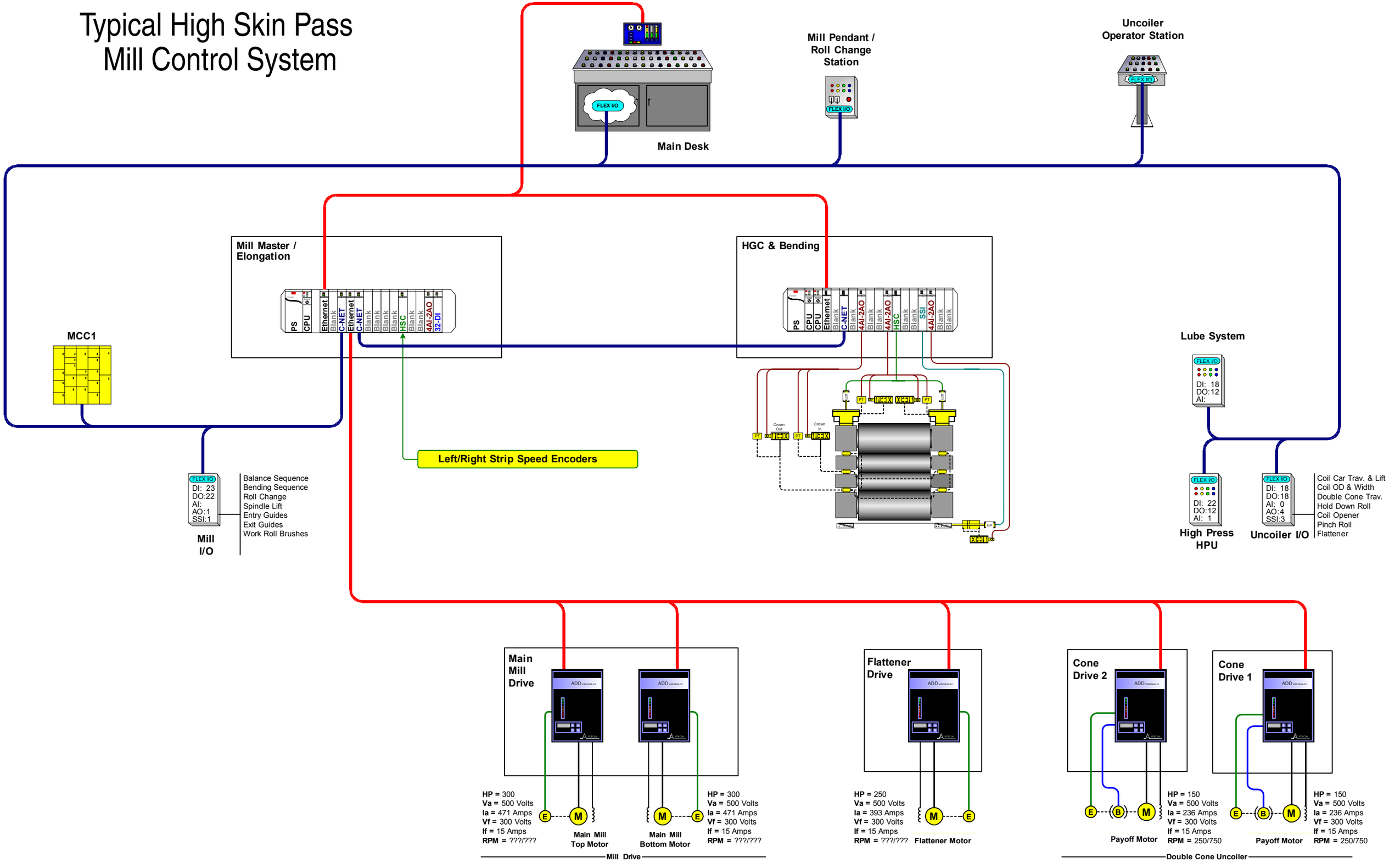Typical High Skin Pass Mill Control System