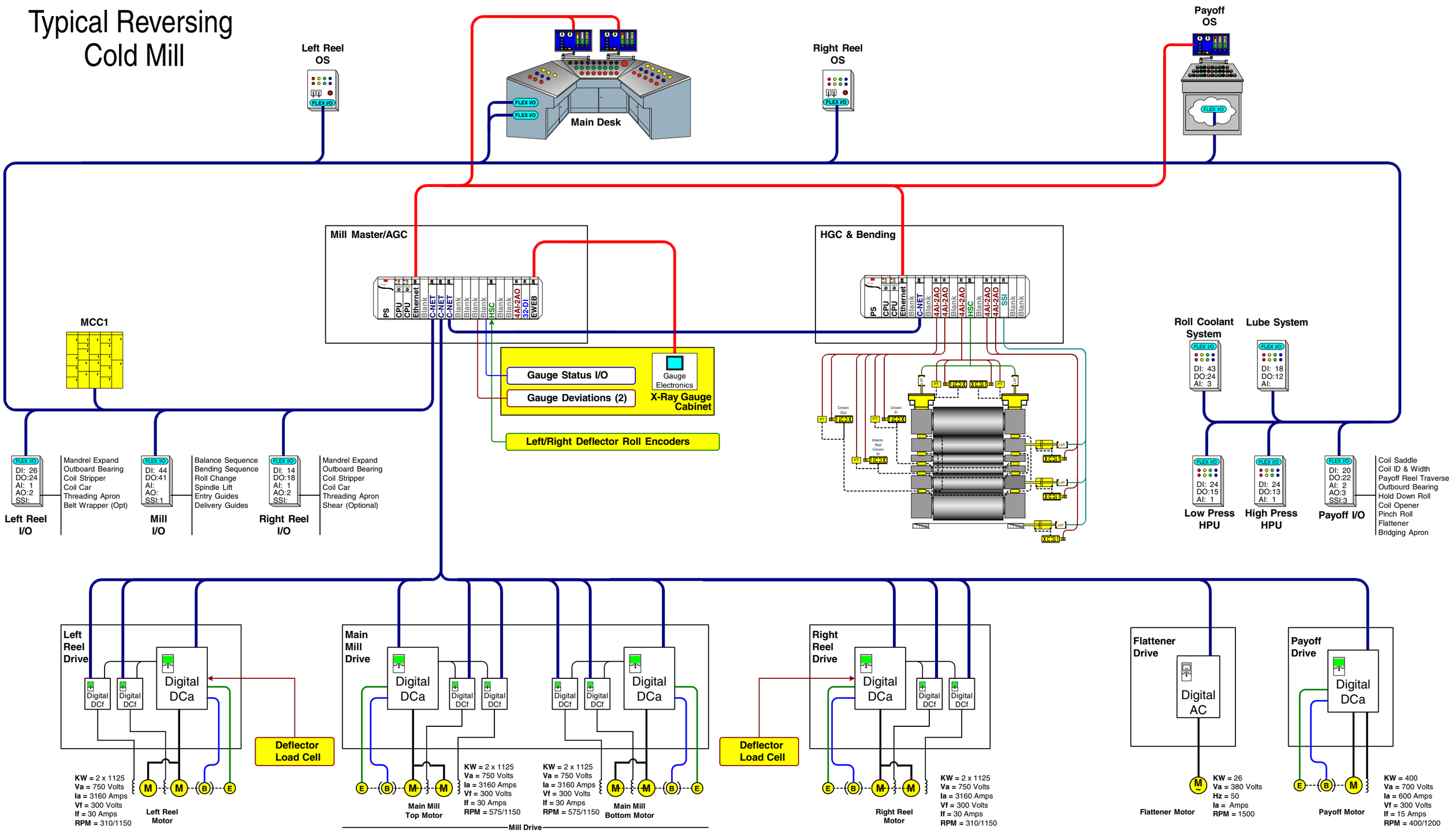Typical Reversing Cold Mill