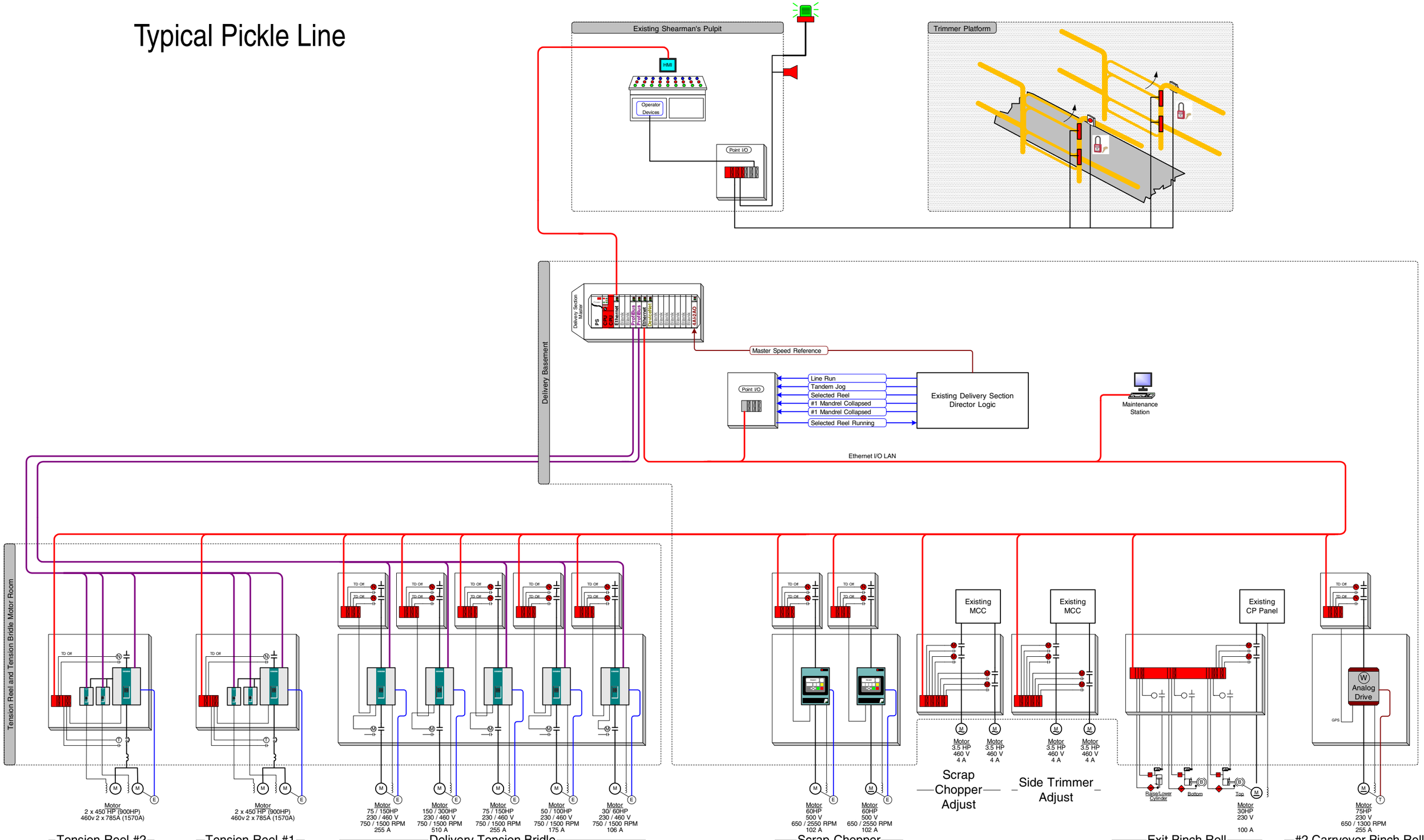Typical Pickle Line